BODY, DASH LOWER - Z26SPD92AN/AH/BN/BH (C750170)

2026 RZR - RZR PRO S ULTIMATE (R01) - Z26SPD92AN/AH/BN/BH

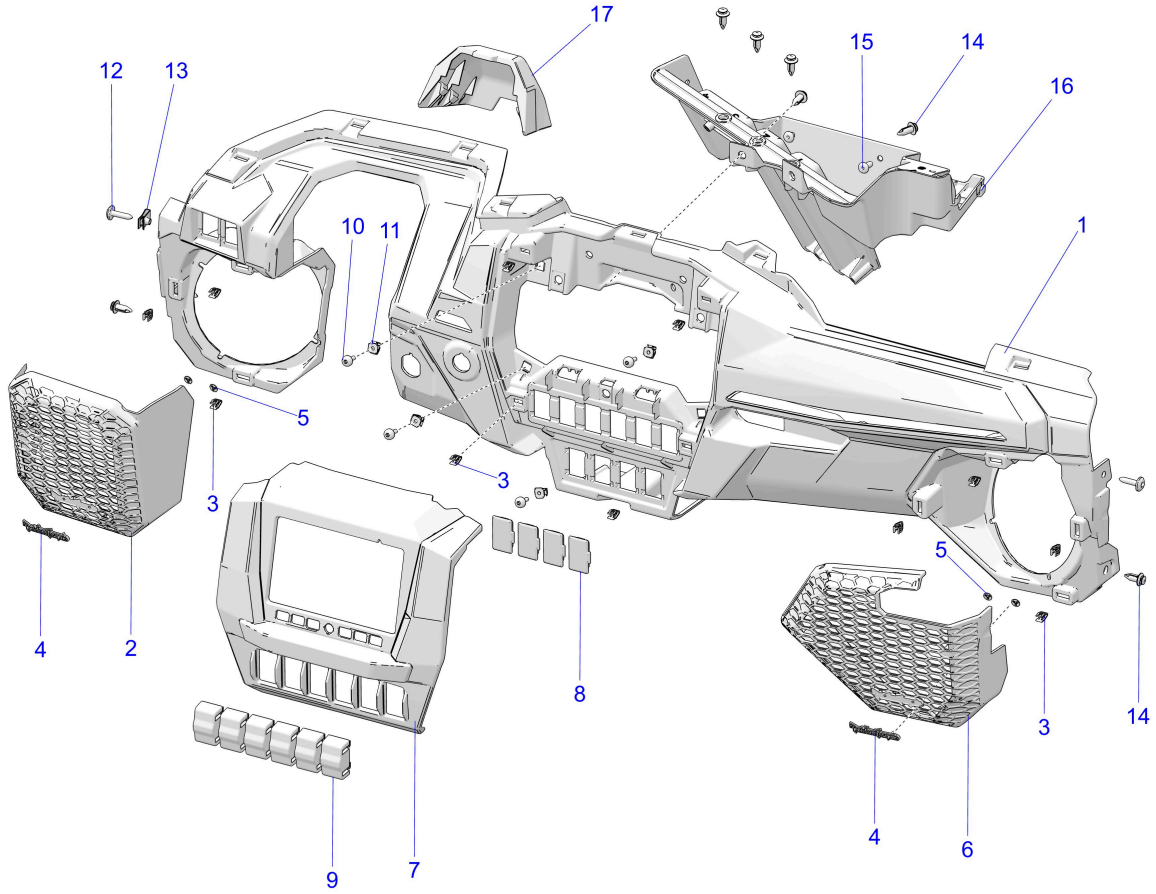

© 2023 Polaris Industries Inc. C750170

Reference #	*Part#*	*Description*	*Quantity*
1	5459965-653	PANEL-DASH,LOWER,TITANIUMMET [TITANIUM METALLIC]	1
2	2639497	ASM-GRILL,SPEAKER,LH,BADGE [INCL. 2-5]	1
2	5459966-070	PANEL-GRILL,SPEAKER,LH,BLK	1
3	5456313	CLIP-TRIM, PLASTIC, WHITE	12
4	5458928	BADGE,GRILL,ROCKFORD	2
5	7548088	NUT-PUSH,BADGE	4
6	2639498	ASM-GRILL,SPEAKER,RH,BADGE [INCL. 3-6]	1
6	5459967-070	PANEL-GRILL,SPEAKER,RH,BLK	1
7	5459969-070	PANEL-DASH,CENTER,BASE&RC,BLK	1
8	5456159	PANEL-SWITCH BLANK	4
9	4018508	PLUG-SWITCH,ROCKER	6
10	7518518	SCREW-M4.2X1.40,12,HEX,BUTT,SHLD	4
11	7547324	NUT, PAL NUT, M4	4
12	7519650	SCR-TXTH-M6X1.0X25 ZFB	2
13	7081305	CLIP-U SPEED NUT	1
14	7661855	RIVET-TUFLOK,.315-.325X.787	7
15	7519045	SCR-TX TRUSS-#14X3/4, HI/LO ZBK	2
16	5465071	PANEL-MOUNT,ACCESSORY,ELEC	1

17	5464950-070	BEZEL-GAUGE HARNESS COVER,BLK	1

Copyright 1996-2026 Polaris Industries U.S.A All rights reserved.